BADP Pneumatic pipe gates

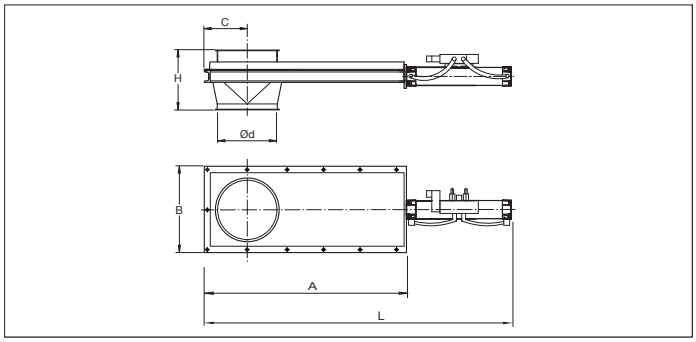

BADP Pneumatic pipe gates
Full welded pneumatic pipe gates to open or close a ducting line in an installation (no possibility to regulate).

The gate blade is secured in an open or closed position by means of the linear cylinder foreseen with 2 limit switches and controlled by 5/2 monostable solenoid valve 24 V DC.

These gates are suitable for the transport of waste materials such as dust and chips but also for the transport of grains and such.

Material
2.00 mm black steel 1.0330 powder coated in RAL 7032.
Electrostatically conductive and food-safe powder coating thickness of 30 to 60 µm.
Temperature resistance up to +80°C.

Type
Rolled sheets with 6 mm edges for lock rings.

Options
- FDA and EU compliant food-grade quality
- with seal
- other voltage : 220 V AC
- stainless steel execution
- wear resistant lining as of Ø150 (83° Shore)
- equipotential equalization or ATEX
- other colors
- other types of edges or connections

Max. air pressure in solenoid valve : 8 Bar.

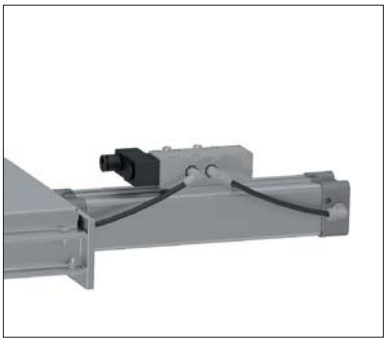

Solenoid valve mounted on cylinder

Underside with transition for a smooth outflow of material

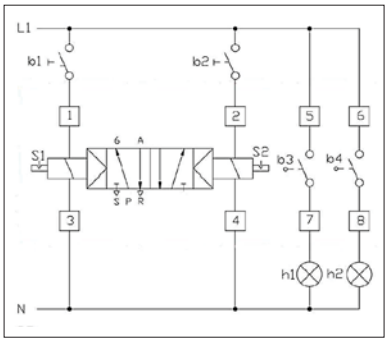

Wiring diagram of 5/2 solenoid valve

Ø d mm	Code	A mm	B mm	L mm	H mm	s mm	Weight kg
100	BADP000002	370	160	104	650	2.00	7.60
120	BADP000003	432	180	138	697	2.00	9.40
150	BADP000004	505	220	152	814	2.00	11.80
175	BADP000005	555	245	212	860	2.00	13.40
200	BADP000006	645	290	182	1000	2.00	17.60
250	BADP000007	776	345	217	1182	2.00	25.00
300	BADP000008	881	395	277	1337	2.00	32.00