# Suspension Clamp

## Description

Clamp with short ear for suspension of circular ducting in confined spaces.

For insulated ducts, it is recommended that the suspension ring be mounted inside the insulation.

## Dimensions

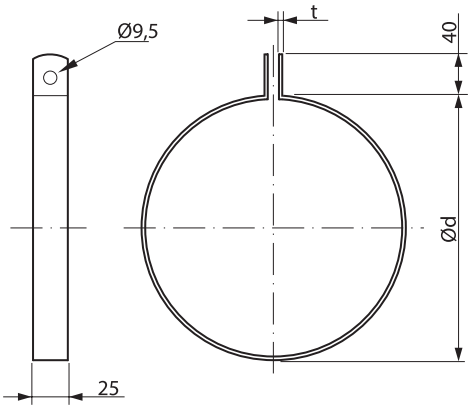


| $Ød_1$ nom | t mm |
|---|---|
| 80 | 2 |
| 100 | 2 |
| 112 | 2 |
| 125 | 2 |
| 132 | 2 |
| 157 | 2 |
| 160 | 2 |
| 180 | 2 |
| 192 | 2 |
| 200 | 2 |
| 224 | 2 |
| 232 | 2 |
| 250 | 2 |
| 260 | 2 |
| 280 | 2 |
| 300 | 2 |
| 315 | 2 |

## Order code

| | 8335 | 300 |
|---|---|---|
| Product | | |
| Dimension Ød | | |

**Example: 8335300-Ø300**

FAV_MarineDuctSystem.2025.V1.1.EN